Anti-Vibration Kit

Features

- Equips multidirectional dampers
- Withstands extreme temperatures
- Extends product lifetimes
- Improves HDD stability
- Available for tBOX and UST Series
- Easy installation as wall mount
- Customisable for different application

Ext. Temp

Specifications

Standard Color	Silver
Construction	Aluminum extrusion and heavy-duty steel and damper
Operating Temperature	-10°C to +60°C (32°F to +140°F)
Vibration Reliability	2Grm with tBOX/UST systems equipping HDD(5 to 500Hz, X/Y/Z direction; random pulse shape, operating)

Ordering Information

Anti-vibration Kit (P/N: 8816N5008A0E)	• For in-vehicle/rolling stock applicable systems which improves HDD/SSD stability • To be used with tBOX300/324/400/500 & UST500 series
Anti-vibration Kit (P/N: 8816N1000A0E)	• For in-vehicle/rolling stock applicable systems which improves HDD/SSD stability • To be used with UST100/tBOX810/tBOX100

HDD Anti-Vibration Improvement

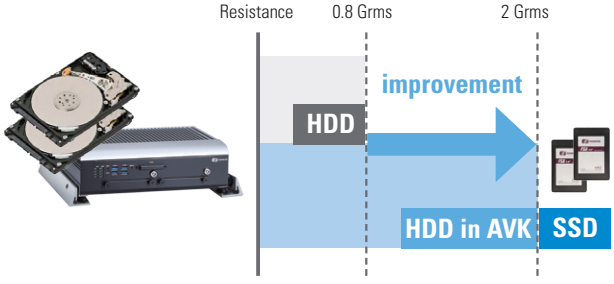

*For more information of vibration test, please contact Axiomtek 's regional distributor

Dimensions

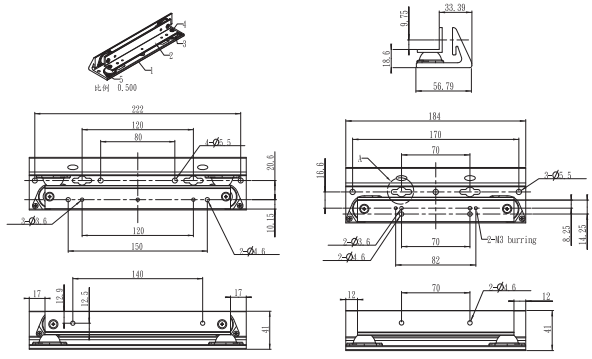

8816N5008A0E

8816N1000A0E

Installation Diagram

*Simply fasten the screw with the Anti-Vibration Kit in the wall mount screw holes on the system as illustration below.

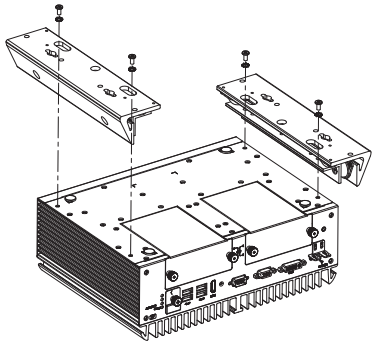

UST500 installation

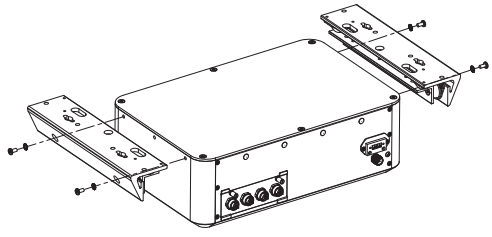

tBOX300 installation

* All specifications and photos are subject to change without notice. www.axiomtek.com © 2021 Axiomtek Co., Ltd. All rights reserved.