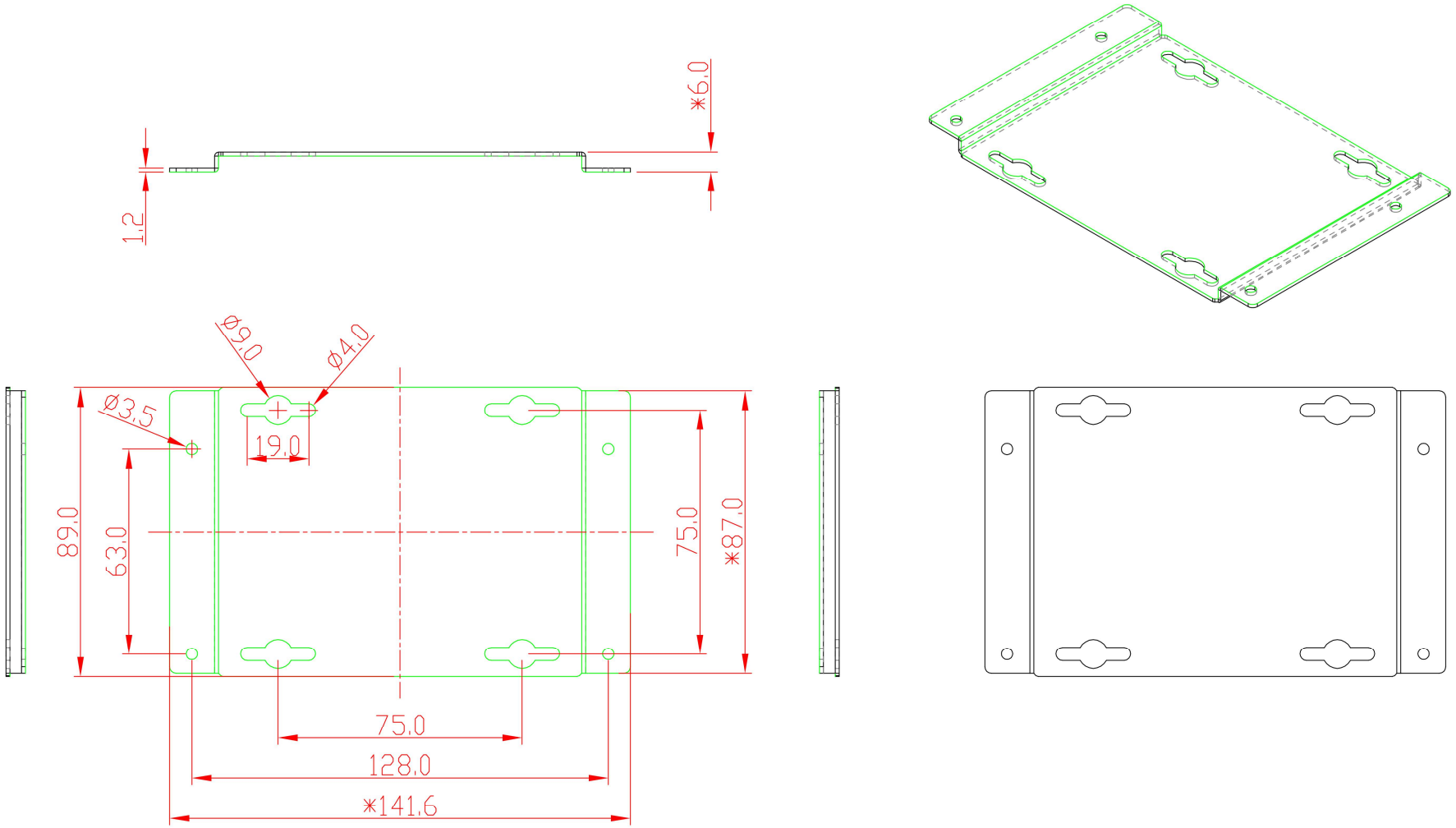

注意事項

1.Material:SGCC(無花) t=1.2mm

2.重點尺寸標記*為必檢測尺寸

3.未標示之圓角均為: R2

4.外觀:全烤漆 勝豐 奎志銀

色板編號: JUN20181101A

5.表面不可有油漬殘留,不可有毛邊殘留,

且不得刮手

RevNo	Revision note	Date	Signature	Checked
2				
1				

Revisions

TOL.± / RANGE	N1	N2	√ M1	M2	S1	S2	CN	ø	√ ANG.
0~6	0.20	0.25	0.15	0.20	0.05	0.10	0.50	0.05	0.5
6~30	0.20	0.25	0.15	0.25	0.10	0.15	1.00		
30~120	0.25	0.35	0.20	0.30	0.20	0.40	2.00		
120~300	0.30	0.35	0.25	0.40	0.40	0.80	3.00		
300~600	0.40	0.50	0.30	0.50	0.50	1.00	3.00		
600~1200	0.50	0.60	0.50	0.60	0.60	1.20	4.00		

COMMENTS:

外觀檢驗規範分類

☐ 外觀件(成品裸露部份)

☐ 內構件

■ 其它：等級 D

PROPRIETARY AND CONFIDENTIAL
THE INFORMATION CONTAINED IN THIS DRAWING IS THE SOLE PROPERTY OF Axiomtek. ANY REPRODUCTION IN PART OR AS A WHOLE WITHOUT THE WRITTEN PERMISSION OF Axiomtek IS PROHIBITED.

	Name	Date
Designed by	Victory	20190829
Checked by	Mandy	20190829
Approved by	Leo	20190829

NEXT ASSY | USED ON

APPLICATION

Material: SGCC | Finished

Rev: A0 | Scale: 1:1 | Sheet: 1/1 | Units: mm

Part Name: eBOX100-51R_BK_VESA-M

Title: eBOX100-51R

File Name: 726K1001300E

AXIOMTEK Innovations for the Industrial World